CHUCK E. CHEESE'S CYCLONE JUNIOR™

OWNERS AND SERVICE MANUAL

INNOVATIVE CONCEPTS IN ENTERTAINMENT INC.

10123 MAIN STREET, CLARENCE, NY 14031
SERVICE: 1-716-759-0360
FAX: 1-716-759-0884
E-MAIL: service@icegame.com
WEBSITE: www.icegame.com

TABLE OF CONTENTS

INTRODUCTION……...PAGE 3

- GAME FEATURES
- GAME PLAY

SET-UP / TESTING / MAINTENANCE……..PAGE 4 –10

- SAFETY PRECAUTIONS
- GAME SET-UP
- TESTING
- CLEANING

QUICK TROUBLESHOOTING……PAGE 11

- PROBLEMS AND SOLUTIONS

GAME REPAIR……..PAGE 12 –13

- MECHANICAL REPAIR
- ELECTRICAL / ELECTRONIC REPAIR

PARTS LISTINGS……PAGE 14

SCHEMATICS / WIRING DIAGRAMS……...PAGE 15 –20

WARRANTY INFORMATION……..PAGE 21 –22

INTRODUCTION

GAME FEATURES

This game has many outstanding features, making it the perfect game for just about any location.

The game was designed with the location in mind, featuring unparalleled flexibility in regards to custom game set-up and programming. Virtually all game play, and ticket dispensing options are operator adjustable, practically letting the operator “build his own game”.

CYCLONE JUNIOR™ has many unique features for a “Ticket Spitter” type of game. Its unique design sets it apart from all other games in its category. Game Play, which is ALL SKILL, having no bounces, rolls, flips or other chancy situations, also showcases its creative design. These, and other features, give players something that keeps them playing time and time again.

Reliability is the key word in the design of **CYCLONE JUNIOR™.** The electronics in the game have been extensively tested to assure years of trouble free service. The light ring bulbs are powered using special circuitry and voltages to greatly enhance their life. The rope lighting used should last the life of the game.

The cabinet has been designed using only the finest materials. The play field cover is made from tempered 3/16” glass and all visible metal work has been powder coated to enhance it appearance as well as provide a very durable surface.

Game set-up is a snap. Just plug in, set a few programmable options, and your ready to go. Even the programming options are easy to understand and adjust.

A “Tickets owed Display” on the scoreboard is used to show tickets owed to the player. More on this feature is given in the following game play section.

GAME PLAY

The game begins when the player has inserted enough money to create 1 “credit”.

The game has a ring of light bulbs encircling the play field. A lit bulb circles this ring every one and one third seconds. The object of the game is to stop the light between the two lit arches located in the middle of the play zone.

Each light bulb in the zone has a “ticket” value associated with it. As you get closer to the two lit arches in the center of the play zone, the ticket value increases. Between the two lit arches, described above, is the game JACKPOT. This is where a large number of tickets can be won.

Once the game begins you have one chance to stop the light (for each credit registered). Wherever the light stops is how many tickets the game pays out. Each time the Jackpot is **NOT** hit, the Jackpot value increases by 1 (or more if the incrementing Jackpot option is selected). When the Jackpot is hit, a Jackpot routine including special lights and sounds are displayed as well as a transfer of the Jackpot into the “tickets owed” display.

Additional games can be played while tickets are dispensing.

The game also has a unique “Tickets Owed” display. This display has many uses. When tickets are won, the amount is displayed, then counted down as the tickets are dispensed. This is a handy feature in the event that the game runs out of tickets while dispensing, or if the game is out of tickets. If the game can not dispense the tickets it should, it will keep adding the number it should dispense to the tickets owed display, and thus allow the player to continue playing the game until an attendant can be contacted. This feature is also very helpful if the “do not dispense tickets on Jackpot” option is chosen. It may be desirable that tickets not be dispensed if the Jackpot is set to a very high number of tickets. This will be valuable, as the number of Jackpot tickets won would then be added to this display, then the ticket dispenser will lock up until an attendant is located, and the dispenser is reset via the reset button located on the coin mech.

GAME SET-UP / TESTING

SAFETY PRECAUTIONS

IMPORTANT: FAILURE TO FOLLOW THESE DIRECTIONS CLOSELY COULD CAUSE SERIOUS DAMAGE TO YOU AND/OR YOUR GAME

WARNING: WHEN INSTALLING THIS GAME, A 3 PRONG GROUNDED RECEPTACLE MUST BE USED. FAILURE TO DO SO COULD RESULT IN SERIOUS INJURY TO YOURSELF OR OTHERS. FAILURE TO USE A GROUNDED RECEPTACLE COULD ALSO CAUSE IMPROPER GAME OPERATION AND/OR DAMAGE TO THE ELECTRONICS.

DO NOT DEFEAT OR REMOVE THE GROUNDING PRONG ON THE POWER CORD FOR THE SAME REASONS AS GIVEN ABOVE. USING AN IMPROPERLY GROUNDED GAME COULD VOID YOUR WARRANTY.

PAY SPECIAL ATTENTION TO THE SET UP SECTION BELOW, REGARDING VOLTAGE SETTINGS.

GAME SET-UP

BEFORE PLUGGING THE GAME IN, OR TURNING IT ON, BE SURE THE GAME HAS BEEN SET TO THE PROPER VOLTAGE. YOUR GAME SHOULD COME PRE-SET FROM THE FACTORY TO THE CORRECT VOLTAGE, HOWEVER IT IS A GOOD IDEA TO CHECK THE A.C. WALL RECEPTACLE VOLTAGE BEFORE PLUGGING THE GAME IN.

The game comes with 4 available voltage settings as described below. These settings should be used to provide power in the correct range to the game without over or under powering it.

POWER RANGE	VOLTAGE SETTING
90 – 110 V.A.C.	110
110 – 130 V.A.C.	120
200 – 220 V.A.C.	220
220 – 240 V.A.C.	240

The game uses a POWER MODULE to handle all of the power distribution chores of the game. It incorporates an ON-OFF switch, primary A.C. game fusing, and power switching capabilities, for using the game with a wide variety of A.C. voltages by re-strapping the main transformer.

A.C. LINE VOLTAGE ADJUSTMENT

To adjust the game for a different A.C. voltage:

1. Unplug the game from the outlet.
2. Disconnect the power cord from the power module.
3. Using a small flat blade screwdriver, pry the fuse holder from the power module.
4. Notice a small window on the fuse holder with an arrow that points to the voltage on the game is presently set at.
5. Using the small flat blade screwdriver, lift the retaining tab that holds the voltage selector in the fuse holder.
6. Rotate the voltage selector until the voltage you want is displayed in the voltage select window.
7. Push the voltage selector back into the fuse holder until it snaps into place. NOTE: Do not force the selector into the fuse holder. If it does not go in easily, it is NOT being installed correctly.
8. Snap the fuse holder assembly back into the power module.
9. Plug the power cord back into the receptacle in the power module, and into the wall outlet.

NOTE: WHEN CHANGING FROM110-120 TO 220-240, LOWER THE MAIN FUSE VALUE BY ½

WHEN CHANGING FROM 220-240 TO 110-120, DOUBLE THE MAIN FUSE VALUE

GAME SET-UP / TESTING

PROGRAMMING YOUR GAME

This section will give you a detailed explanation on the functions and operating characteristics of each of the programming buttons. Please read this section carefully to avoid problems with your game.

NOTE: THE PROGRAMMING BUTTONS ARE LOCATED ON THE LOWER LEFT SIDE OF THE MAIN P.C. BOARD.

PROGRAMMING BUTTON (SW1)

This button is used to enter the “Programming” mode. It is located on the Main P.C. Board in the lower left hand corner. Press this button once to enter the programming mode.

Once in this mode you can push SW2 to select modes 1 –44, then use SW3 or SW4 to move up or down in numbers within the chosen mode.

To exit the programming mode and return to game play, push SW1 again.

SELECT BUTTON (SW2)

This button is used to advance through all the programming modes. Each push of this button, will move you to the next programmable mode. The mode number will be displayed in the “CREDITS” display on the scoreboard.

SET UP BUTTON (SW3)

Each push of this button will advance you to the next available “value” for a particular programmable mode. The value for that mode is shown on the “JACKPOT” display located on the scoreboard.

STEP DOWN BUTTON (SW4)

Each push of this button will back you up to the previous “value” for a particular programmable mode. The value for that mode is shown on the “JACKPOT” display located on the scoreboard.

SELF TEST MODE (SW5)

This mode was used in the prototype testing of the game and has no significance in the operation of this game

AUDIO MODE (SW6)

This button is used to test the sounds the game makes during game play. Each push of the button will produce a new sound, used during game play, until all sounds have been heard, then it will repeat.

GAME SET-UP / TESTING

OPTION MODES

Please read the setting information carefully BEFORE making any adjustments. Failure to set options properly can yield unexpected results

PLEASE NOTE: THE VALUES PRE-SET AT THE FACTORY HAVE BEEN FOUND TO WORK BEST FOR MOST LOCATIONS.

MODE 0 (VOLUME)

The number set in this mode controls the relative volume of the sound. “0” equals minimum, “9” equals maximum. As this button is pushed, a sound is played to make it easier to determine where the volume should be set. The default value for this mode is”3”.

NOTE: THE SOUND IN THIS GAME CANNOT BE COMPLETELY TURNED OFF.

MODE 1 (COINS PER CREDIT 1)

The number set in this mode, is the number of coins necessary to earn 1 credit, and play 1 game. Setting a “0” in this mode will set the game in “Free Play” mode. The default for this mode is “1”.

MODE 2 (COINS PER CREDIT 2)

This is an extra mode used to create a change in currency for games not sold in the United States

MODE 3 (COINS PER CREDIT 3)

This is an extra mode used to create a change in currency for games not sold in the United States.

MODE 4 (COINS PER CREDIT 4)

This is an extra mode used to create a change in currency for games not sold in the United States.

MODE 5 (MULTI-CREDITS)

The number set in this mode is the number of credits that will be associated with each coin received.

Example: If this option is set to “2” then for every coin received there will be “2” credits given. If this option is set to “4” then for every coin received there will be “4” credits given.

The default value for this option is “1”.

MODE 6 (CREDIT DISCOUNTING)

When this mode is enabled, the game will give you 1 free credit for every XXX coins inserted into the game AT ONE TIME. A setting of “0” turns this mode off.

Example: If “2” is chosen, for every 2 coins inserted, 1 free game will be given. If “4” is chosen, for every 4 coins inserted, 1 free game will be given.

The default value for this option is “0”.

MODE 7 (ATTRACT MODE)

The attract mode consists of a sound used during the game being played whenever called to do so by the game program. The numbers in this mode represent minutes between attract modes. Setting a “0” in this mode turns the attract mode off. The default value in this mode is 3.

GAME SET-UP / TESTING

MODE 8-33 (ZONE VALUES)

The play field consists of 66 lights, 26 of which make up the play zone. In the center of the play zone lies the “Jackpot” where a large amount of tickets could be won. Each light, in the play zone, has a point value associated with it. Each light can be independently set for a point value for that zone. Each light is a separate “zone”.

Listed on the table below are the 26 zones and the associated “mode” number for each. Zone 1 is the furthest from the Jackpot to the right, while zone 26 is the furthest from the Jackpot to the left. Also, in this table, are the default values for each zone.

LIGHT RING ZONE VALUES		
MODE	ZONE	DEFAULT
8	1	1
9	2	2
10	3	2
11	4	3
12	5	3
13	6	4
14	7	4
15	8	5
16	9	5
17	10	6
18	11	7
19	12	8
20	13	10
21	14	10
22	15	8
23	16	7
24	17	6
25	18	5
26	19	5
27	20	4
28	21	4
29	22	3
30	23	3
31	24	2
32	25	2
33	26	1

For each zone a value from 0 to 20 can be set. If the values are changed for the factory default settings, it will be necessary to change the numbers indicated on the play zone by using the supplied decal overlay sheets.

MODE 34 (JACKPOT DIFFICULTY)

To make the game easier or harder to win, this mode should be adjusted.

The value displayed is equal to how many half milliseconds the “WINDOW” to win the Jackpot is open. (A half millisecond is 1/2000 of a second) A setting of “1” is the hardest (equal to ½ millisecond), and a setting of “40” is the easiest. (equal to 20 milliseconds) The remainder of the lights in the play field have a factory set value of 20 milliseconds. The default value for this mode is “6”

MODE 35 (JACKPOT WINDOW)

This mode adds a valuable feature to those locations that have large variations in age groups. Under normal circumstances, the operator sets up MODE 34 for the best payout for his location. However, this may be too difficult for some age groups. There are also circumstances where the operator may want the Jackpot to be won on an average of XXX amount of games. This mode will allow for that. When this mode is selected, no matter what window value is set at in MODE 34, the game will open a window, programmable from ½ millisecond (hardest) to 20 milliseconds (easiest), every XXX games. Every XXX games, is the number you choose on this setting. A setting of ”0” turns this mode off. The default setting for this mode is “0”.

MODE 36 (JACKPOT LOCKUP)

This mode allows the operator the choice of whether or not to dispense tickets when the Jackpot is hit.

If the operator normally sets the Jackpot to a very high value, he/she may not wish to dispense tickets when the Jackpot is hit. If the game is set to a lower Jackpot, it is a good idea to let the game dispense tickets by itself.

It is usually better to let the game dispense tickets, as part of the fun in the game is watching all those tickets come out when the Jackpot is hit. It also attracts attention to the game, promoting further game play by others in the general area.

Setting a “0” dispenses tickets. Setting a “1” does not allow tickets to dispense when the Jackpot is hit. The default value for this mode is “0”.

NOTE: WHEN THE GAME IS SET **NOT** TO DISPENSE TICKETS, THE TICKET DISPENSER RESET BUTTON MUST BE PRESSED FOR THE GAME TO RESUME DISPENSING ANY TICKETS. THE RESET BUTTON IS CONVENIENTLY LOCATED ON THE COIN MECH HOLDER.

GAME SET-UP / TESTING

MODE 37
(JACKPOT BASE VALUE)

The value set in this mode, is the value of the Jackpot when the game is first powered up, or just after a Jackpot is won. The default value for this mode is “100”.

MODE 38
(JACKPOT CAP)

The number shown in this mode is the maximum amount of tickets the game will dispense when the Jackpot is won. Setting a “0” turns the cap off. The default value for this mode is “500”.

MODE 39
(STATION I.D.)

When more than one game is to be employed in a single location, it may be desirable to have the games linked so as to eliminate the chance of having one game more desirable than another due to the size of the “Jackpot”. To synchronize the “Jackpot”, the games must have different identification numbers. The numbers available are from 0-15. It doesn’t matter which numbers you pick, or if the numbers are sequential or not, so long as each number is different. The default value for this mode is”15”.

IMPORTANT: IF THE STATION I.D.’S ARE NOT SET PROPERLY, THE GAME WILL WORK STRANGELY, CAUSING MANY UNEXPECTED PROBLEMS.

MODE 40
(GAMES INCREMENT)

The number set in this mode is the number of games that will need to be played before an increase in the Jackpot base will take place. A setting of “0” for this option will cause the Jackpot to remain constant at the number set in MODE 37. The default for this option is “1”.

MODE 41
(JACKPOT INCREMENT)

The number set in this mode is the amount the Jackpot value will increase by each time the game is played, and the Jackpot IS NOT WON.
Setting a “0” for this mode will turn the incrementing feature off and cause the Jackpot to remain constant at the number set in MODE 37. The default value for this option is “1”.

MODE 42
(CREDITS OR COINS)

This mode allows the operator to choose whether coins or credits are being counted as coins are fed into the game. Setting this option to “0” counts credits while a setting of “1” will count coins. The default value for this option is “0”.

MODE 43
(SAVE HIGH SCORE)

This mode allows the operator to choose whether the high score is retained after the power down or if the high score will be reset to the Jackpot base value set in MODE 37. Setting this mode to “0” WILL NOT retain high score after power down. Setting this mode to “1” WILL retain the high score after power down. The default value for this option is “0”.

MODE 44
(RESET DEFAULT)

When this mode is selected, the game will revert to all factory settings.

SET ‘1’ THEN EXIT PROGRAMMING MODE TO RESET ALL VALUES TO FACTORY DEFAULT.

The default value for this mode is “0”

GAME SET-UP / TESTING

TESTING

After the initial programming adjustments have been made, it's time to test your game for proper operation.

1. Locate the game in its permanent location.

2. Be sure that the game has been properly plugged into a 3 prong grounded outlet, and that the receptacle is in good working order.

3. If using an extension cord, be sure it is a 3 prong grounded type of at least 16 Ga.

4. Adjust the leg levelers and lock into position.

5. Verify that the game is set up for the proper voltage, and turn power to the game on.

6. Insert coins at least ten times into the coin mech to assure proper operation. An audible sound should be heard each time a credit is accumulated.

7. Check the coin counter (located inside the coin door) and check for proper operation.

8. Run tickets through the ticket dispenser by playing games. Check that tickets do not get stuck behind ticket louver.

9. Check each ticket counter for proper operation.

10. Check to see if the proper amount of tickets are dispensed based on the numbers shown on the scoreboard.

11. Check that all door locks work smoothly.

12. Check game volume during busy time at location to set it at the proper level.

IF YOU HAVE ANY QUESTIONS OR COMMENTS REGARDING INSTALLATION OR PROPER FUNCTION OF THE GAME, PLEASE CALL OUR SERVICE DEPARTMENT AT 1-716-759-0360

MAINTENANCE

GENERAL MAINTENANCE

This game has been designed for an absolute minimum amount of maintenance.

The light ring bulbs have been designed in such a fashion as to greatly extend their life. However, eventually they will reach the end of their life span. When this time comes, you will notice that 2 or 3 bulbs have burned out within a couple of weeks time from each other. At this point, it is advisable to change all of the bulbs. The bulbs are a simple push in type, very easy to change, and very inexpensive. Changing all of the bulbs at once, will save you work in the long run, and will keep the game looking good.

CLEANING

Regular cleaning of the game will keep it looking new, and greatly enhance its appeal.

Clean the play field glass with a standard glass cleaner like Windex™ to keep the games appearance up. The scoreboard face can be cleaned using a spray type furniture polish like Behold™. It will fill minor scratches and give the plastic surface a deeper, clearer look.

Clean the cabinetry with a good cleaner such as Fantastik™ or 409™. A mild soapy solution can also be used.

NOTE: DO NOT USE ALCOHOL, THINNERS OF ANY KIND, OR PINBALL PLAY FIELD CLEANERS ON ANY OF THE CABINET SURFACES, ESPECIALLY THE DECALS.

QUICK TROUBLESHOOTING

PROBLEM	PROBABLE CAUSE	SOLUTION
NO GAME POWER	ON-OFF SWITCH ON GAME TURNED OFF A.C. POWER FUSE BLOWN GAME NOT PLUGGED IN OR CORD DAMAGED BAD TRANSFORMER TRANSFORMER HARNESS NOT CONNECTED BAD POWER MODULE	TURN POWER ON REPLACE WITH PROPER FUSE CHECK POWER CORD CHECK FOR PROPER VOLTAGES CHECK HARNESS REPLACE POWER MODULE
GAME WILL NOT TAKE MONEY OR GIVE CREDITS CORRECTLY	BAD COIN SWITCH COIN DISCOUNTING OPTION SET WRONG COINS PER CREDIT SETTING INCORRECT BAD COIN MECHANISM LOOSE OR DAMAGED HARNESSING BAD MAIN PC BOARD BAD 5 VOLT POWER SUPPLY FUSE MULTI-CREDIT OPTION SET WRONG	CHECK W/METER AND REPLACE CHECK PROGRAMMABLE SETTING CHECK PROGRAMMABLE SETTING ADJUST OR REPLACE CHECK W/METER AND REPAIR REPAIR OR REPLACE MAIN BOARD CHECK AND REPLACE FUSE CHECK PROGRAMMABLE SETTING
TICKETS DO NOT DISPENSE OR DISPENSE INCORRECTLY	ZONE VALUES SET UP INCORRECTLY TICKET RESET BUTTON NOT PUSHED TICKET DISPENSER OPTICAL SENSOR DIRTY TICKET DISPENSER HARNESSING BAD TICKET DISPENSER BAD BAD MAIN P.C. BOARD BAD 5 VOLT POWER SUPPLY FUSE	CHECK PROGRAMMABLE SETTING PRESS RESET BUTTON CLEAN OPTICAL SENSOR CHECK W/METER AND REPAIR REPLACE DISPENSER REPLACE MAIN P.C. BOARD CHECK AND REPLACE FUSE
LIGHT ROPE DOES NOT LIGHT	BAD ROPE LIGHT BAD ROPE LIGHT HARNESSING BAD RELAY (SOLID STATE) BAD RING P.C.B. (CJ2035JX) BAD MAIN LOGIC	TEST ROPE LIGHT AND REPLACE CHECK W/METER AND REPAIR CHECK AND REPLACE RELAY REPLACE RING P.C.B. CHECK AND REPLACE LOGIC P.C.B.
RING LIGHT BULBS DO NOT LIGHT	BAD LIGHT BULB BAD LIGHT RING P.C. BOARD BAD INTERCONNECT HARNESSING BAD MAIN P.C. BOARD LIGHT RING POWER SUPPLY FUSE BAD BAD 5 VOLT POWER SUPPLY FUSE	REPLACE LIGHT BULB REPLACE LIGHT RING P.C. BOARD CHECK W/METER AND REPAIR REPAIR OR REPLACE P.C. BOARD CHECK AND REPLACE FUSE CHECK AND REPLACE FUSE
SCORE DISPLAYS DO NOT WORK	BAD 12 VOLT FUSE BAD 5 VOLT POWER SUPPLY FUSE BAD SCORE DISPLAY P.C. BOARD BAD MAIN P.C. BOARD BAD SCORE DISPLAY HARNESSING	CHECK AND REPLACE FUSE CHECK AND REPLACE FUSE REPAIR OR REPLACE P.C. BOARD REPAIR OR REPLACE P.C. BOARD CHECK W/METER AND REPAIR
JACKPOT LIGHT DOES NOT WORK	BAD 12 VOLT FUSE BAD 5 VOLT POWER SUPPLY FUSE BAD SCORE DISPLAY P.C. BOARD BAD MAIN P.C. BOARD BAD SCORE DISPLAY HARNESSING	CHECK AND REPLACE FUSE CHECK AND REPLACE FUSE REPAIR OR REPLACE P.C. BOARD REPAIR OR REPLACE P.C. BOARD CHECK W/METER AND REPAIR
LOW / NO TICKET INDICATOR DOES NOT WORK	BAD INDICATOR L.E.D. L.E.D. INSTALLED BACKWARDS HARNESSING BAD TICKET MICRO SWITCH BAD MAIN P.C. BOARD BAD	REPLACE L.E.D. REVERSE L.E.D. CHECK W/METER AND REPAIR REPLACE MICRO SWITCH REPAIR OR REPLACE P.C. BOARD
STORM STOPPER BUTTON DOES NOT STOP LIGHT	BAD BUTTON SWITCH BAD HARNESSING BAD MAIN P.C. BOARD	REPLACE SWITCH CHECK W/METER AND REPAIR REPAIR OR REPLACE P.C. BOARD

GAME REPAIR

WARNING: ALWAYS REMOVE POWER FROM THE GAME BEFORE ATTEMPTING ANY SERVICE, UNLESS NEEDED FOR SPECIFIC TESTING. FAILURE TO OBSERVE THIS PRECAUTION COULD RESULT IN SERIOUS INJURY TO YOURSELF AND/OR OTHERS

OPERATIONAL BACKGROUND

The CYCLONE JUNIOR™ coin operated amusement game has been designed for an absolute minimum of service. Special circuitry prolongs the life of the incandescent light bulbs. In addition, the rope light used has a life span measured in years.

The Light Ring P.C. Boards were designed to add reliability to the game by eliminating the massive amount of wiring that would be needed for the 66 light ring bulbs used. The light sockets on the board were chosen to allow the use of the least expensive bulbs possible. The boards were designed to change quickly and easily in the unlikely event that something would go wrong with one of them.

TROUBLESHOOTING PHILOSOPHY

To find problems with the game, always check the obvious first. See that the game is plugged in, and that all of the fuses on the game are good. This includes the fuse that is located INSIDE the power module.

Next, check to see that all of the connectors are firmly seated, and that no wires have been pulled out.

When trying to find out if specific components are bad or not, try swapping them with components from another **CYCLONE JUNIOR™** (if applicable) to see if the problem moves with the component, or where it was. This will help you decide if you have a problem with a specific component, or maybe a problem with either the wiring or the Main P.C. Board. Use extreme caution when using probes or voltmeters if the game is powered up. If checking continuity, it is important to disconnect the harnessing at both ends, as attached they may yield erroneous results.

If a P.C. Board is suspected as causing your problems, check to see that all of the I.C. chips are firmly seated on the board.

If light bulbs are suspected, swap them with one that is known to work to narrow the problem down to bulb or P.C. Board.

MAIN P.C. BOARD REPLACEMENT

1. Remove all A.C. power from the game.
2. Carefully remove all of the connectors from the P.C. Board.
3. Remove the 4 long plastic hexagon nuts that secure the board to the mounting bracket.
4. Gently pull the P.C. Board from the mounting bracket studs.
5. Re-install in the reverse order.

LIGHT RING P.C. BOARD REPLACEMENT

1. Remove all A.C. power to the game.
2. Remove the harness to the suspected bad P.C. Board.
3. Remove the light bulbs from the bad board.
4. Remove the 4 screws that hold the P.C. Board to the bottom of the play field.
5. Re-assemble in reverse order.

GAME REPAIR

SCOREBOARD DISPLAY P.C. BOARD REPLACEMENT

1. Remove all A.C. power from the game.
2. Remove (4) ½” allen head screws holding the scoreboard cover in place.
3. Remove (2) white plastic dividers by gently pulling from the holes in the larger P.C. Board.
4. Remove (4) ½” long metal hexagonal nuts that secure the small P.C. Board in place.
5. Gently pull small P.C. Board from the studs and allow it to carefully hang down.
6. Remove (4) 1’ long plastic hexagonal nuts located on the same studs the small P.C. Board came off.
7. Remove remaining (4) ½” plastic hexagonal nuts located on the outer edge of the larger P.C. Board.
8. Gently pull the larger P.C. Board from all studs while supporting the smaller P.C. Board.
9. Re-install in the reverse order.

ROPE LIGHT REPLACEMENT

1. Remove all A.C. power from the game.
2. From underneath the play field, remove the white power cord from the rope light via the plastic “screw” connection.
3. Remove small “C” clip from the rope light near the power inlet end.
4. Feed the rope light partly through the lower hole then partly through the upper hole in the play field allowing the rope light to protrude slightly through the upper hole.
5. Remove the plastic cap from the rope light end near the upper hole in the playfield.
6. Remove the rope light from upper hole in the play field then through lower hole in the play field.
7. Feed “NEW” rope light through the lower hole in the playfield then through the upper hole in the play field.
8. Replace the end cap to the end of the rope light near the upper hole in the play field.
9. Attach “C” clip to the rope light as close as possible to the bottom of the play field, so as to keep the rope light as taught as possible on the other side.
10. Attach the white power cord to the rope light via the plastic “screw” connection.

BULB SEQUENCE

1. The rope light that arches at the center of the jackpot zone should alternately flash on and off.
2. When the jackpot is hit, the ring lights circling the play field, should sweep from the far side of the game, to the jackpot area.
3. The “Storm Stopper” button will light up only when the circling light is in the play zone.

PARTS LISTINGS

MECHANICAL PARTS

CJ1105	Cabinet Door Frame
SM1006A	Cabinet Coin Door (Dual Mechs)
CJ1007	Cabinet Ticket Door
HR1009	Main P.C. Mounting Bracket
CJ1110	Scoreboard Mounting Bracket
CJ3004	Score Board Housing
HR1013	Ticket Door Chain
SM1008	Cash Box Door
CJ3001	Play Field Cover
CJ3003	Play Field
HR1019	Leveler Foot
----------	Coin Mech (Various)
CC2005	Large Button (Yellow)
5101	Mech Holder
5101A	Reject Button
5101C	Entry Bezel
5101D	Return Bezel
5101E	Entry Stop
HR3027	Cover Glass
BB1009	Cash Box Enclosure
BB5001	Cash Box
HR1002	Vent Grill
HR1003	Stadium Support Bracket (Rear)
HR1004	Stadium Support Bracket (Front)
HR1011	Control Panel Support

ELECTRICAL / ELECTRONIC PARTS

FP2007	Speaker
HH5005	Ticket Dispenser
PC20224	Counter (12V)
2426	Phone Cord 12’
211	Low Ticket Switch
1024	Ticket Bin (Double)
1026	Ticket Bin Switch Mounting Bracket
2289	Reset Button
CC2027	Power Cord 20’
HH2050	Power Module
CC3007	Power Module Enclosure
CC1009	Power Module Mounting Plate
2364	Fan
HR2002X	Transformer HR Assembly
CJ2032X	PCBA Display Junior Board
CJ2003X	PCBA Swirl Lamp Board
CJ2035RX	PCBA Banana JR. (Ring)
CJ2035JX	PCBA Banana JR. (Jackpot)
HR2034X	PCBA Main Board Assembly
HR2050X	Harness Lower Cabinet
HR2051X	Harness Score Board
HR2053X	Harness Button

HARDWARE & MISC.

5014C	Coin Door Lock (Chuck E. Cheese)
PC60615A	#2 Square Drive Bit
FP1004	Leg Levelers Mounting Bracket
3039	Grommet (BP2 – Punched)
1017	LED Holder (Metal)
2133	Rope Light (Yellow)
2134	Dead End Caps
2133A	Hard Wire Leads
2268	Battery Holder
2364G	Fan Finger Guard
201	T-Molding (3/4 Chrome)
CJ9001	Service Manual (Cyclone Junior)

GRAPHICS

CJ7001	Score Board Ticket Overlay
----------	Score Board Ticket Overlay Assembly
----------	Control Panel Overlay
CJ7003	Light Separator
----------	Cyclone Mirror Logo
----------	Decal (Cabinet Side)
----------	Decal (Outer Ring Jackpot)
CJ7008	Decal (Program)
CJ7021	Decal (Fuse Rating)
CJ7102	Decal (Control Panel)
CJ7104	Decal (Chuck E Center Round)
CJ7106	Decal (Chuck E Side Cabinet)
CJ7109	Decal (Chuck E Inner Ring Upper)
CJ7110	Decal (Chuck E Inner Ring Upper)
CJ7111	Decal (Chuck E Numbered Zone Right)
CJ7112	Decal (Chuck E Numbered Zone Left)
CJ7113	Decal (Chuck E Inner Ring Bonus)
CJ7115	Decal (Chuck E Outer Ring Upper)
CJ7116	Decal (Chuck E Outer Ring Upper)
CJ7120	Decal (Chuck E Ring Arrow)
CJ7125	Decal (Chuck E Logo Curve)
CJ7126	Decal (Chuck E Front Door Dots)
CJ7127	Decal (Chuck E Front Door Tickets)
CJ7128	Decal (Chuck E Front Door Lower)
CJ7129	Decal (Chuck E Logo Curve)

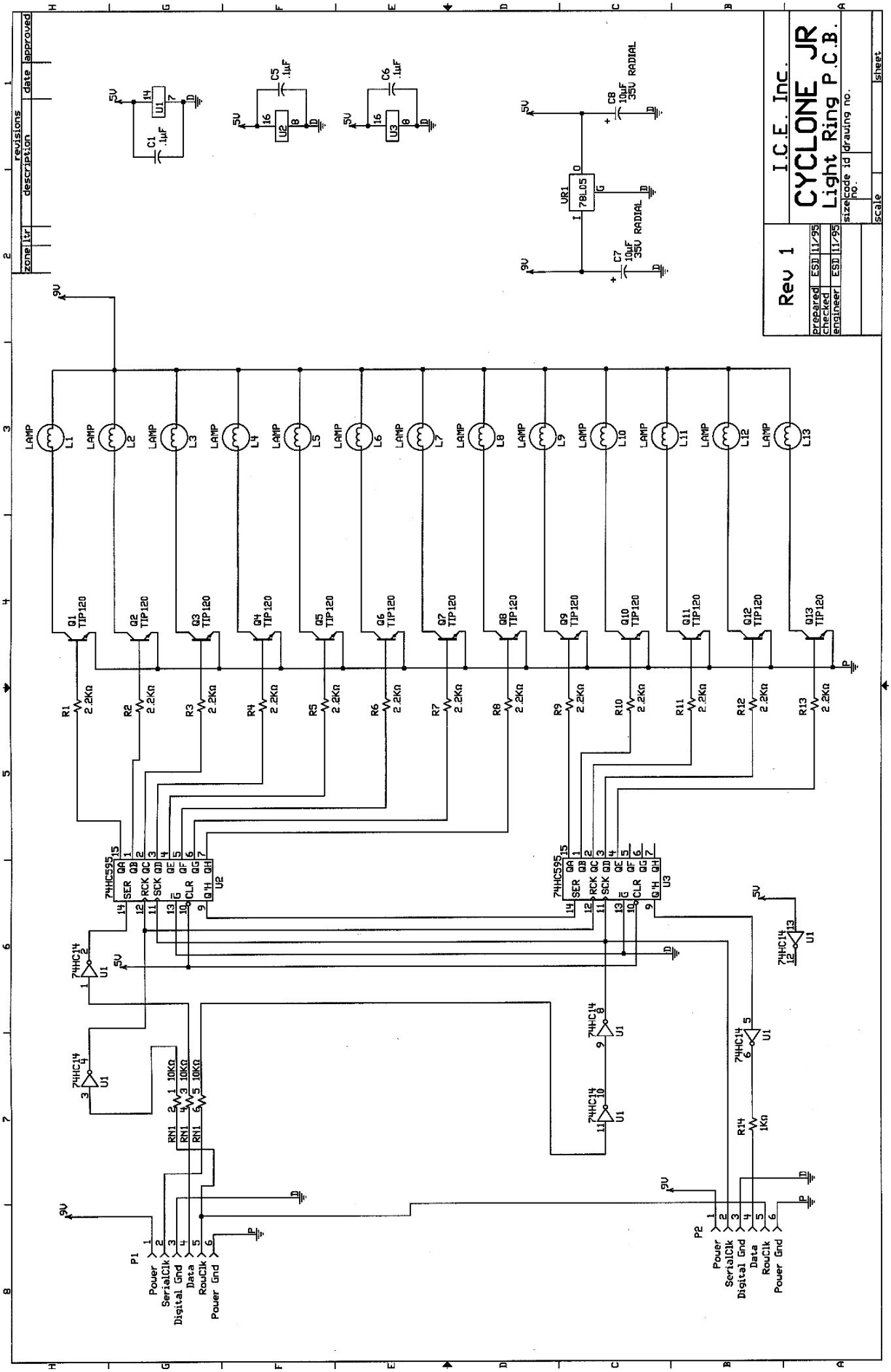
I.C.E. Inc.
CYCLONE JR
Light Ring P.C.B.
Rev 1
prepared ESD 11/95
checked
engineer ESD 11/95
sizecode id drawing no.
no.
scale
sheet
revisions
zone ltr description date approved
C1 .1µF
C5 .1µF
C6 .1µF
C8 10µF 35V RADIAL
C7 10µF 35V RADIAL
VR1 78L05
U1 74HC14
U2 74HC595
U3 74HC595
RN1 10KΩ
R14 1KΩ
R1 2.2KΩ
Q1 TIP120
L1 LAMP
P1
Power
SerialClk
Digital Gnd
Data
RouClk
Power Gnd
P2
Power
SerialClk
Digital Gnd
Data
RouClk
Power Gnd

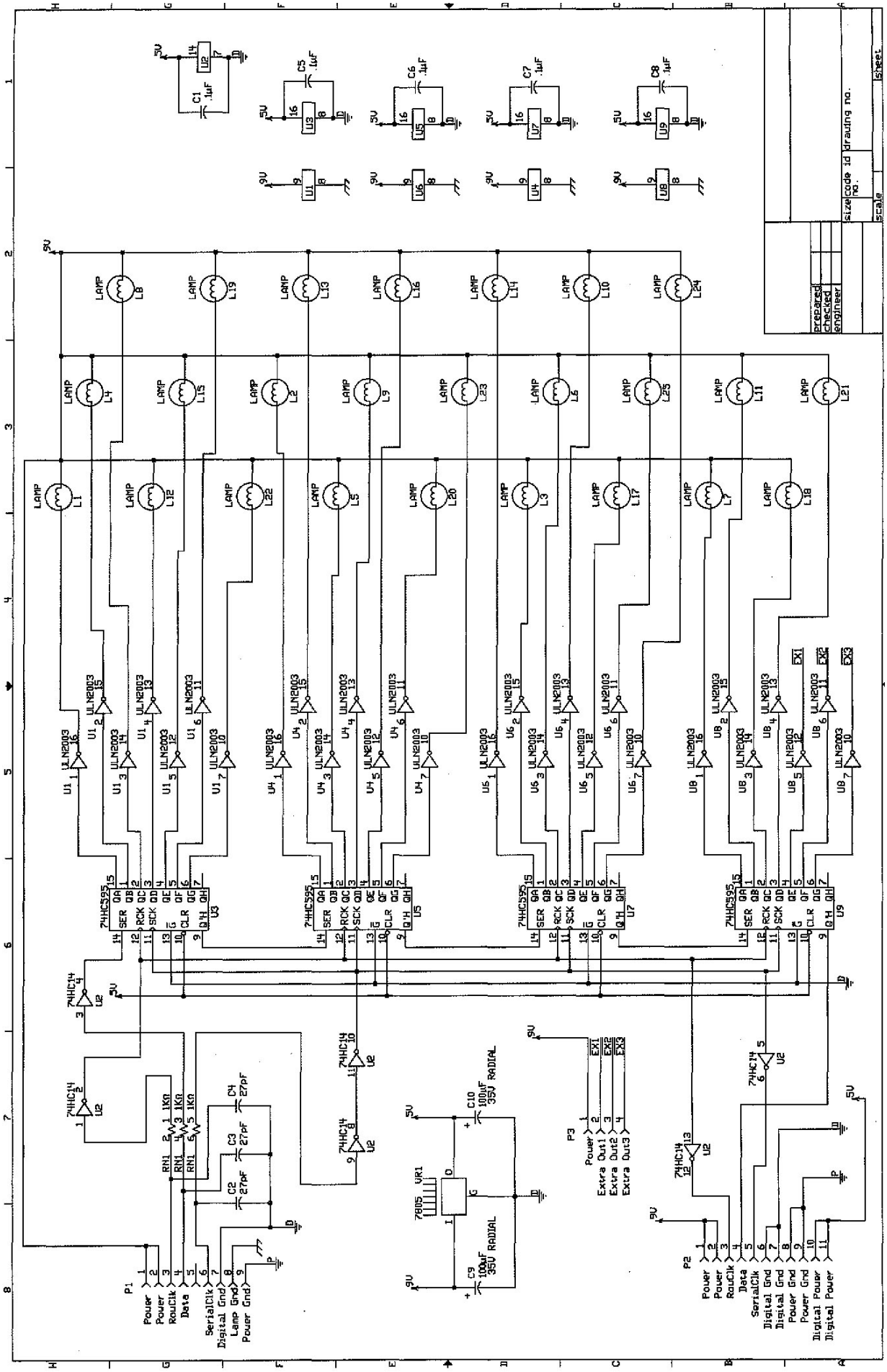
prepared
checked
engineer
size
code id
no.
drawing no.
sheet
scale
74HC595
ULN2003
74HC14
LAMP
7805
P1
Power
Power
RowClk
Data
SerialClk
Digital Gnd
Lamp Gnd
Power Gnd
P2
Power
Power
RowClk
Data
SerialClk
Digital Gnd
Digital Gnd
Power Gnd
Power Gnd
Digital Power
Digital Power
P3
Power
Extra Out1
Extra Out2
Extra Out3

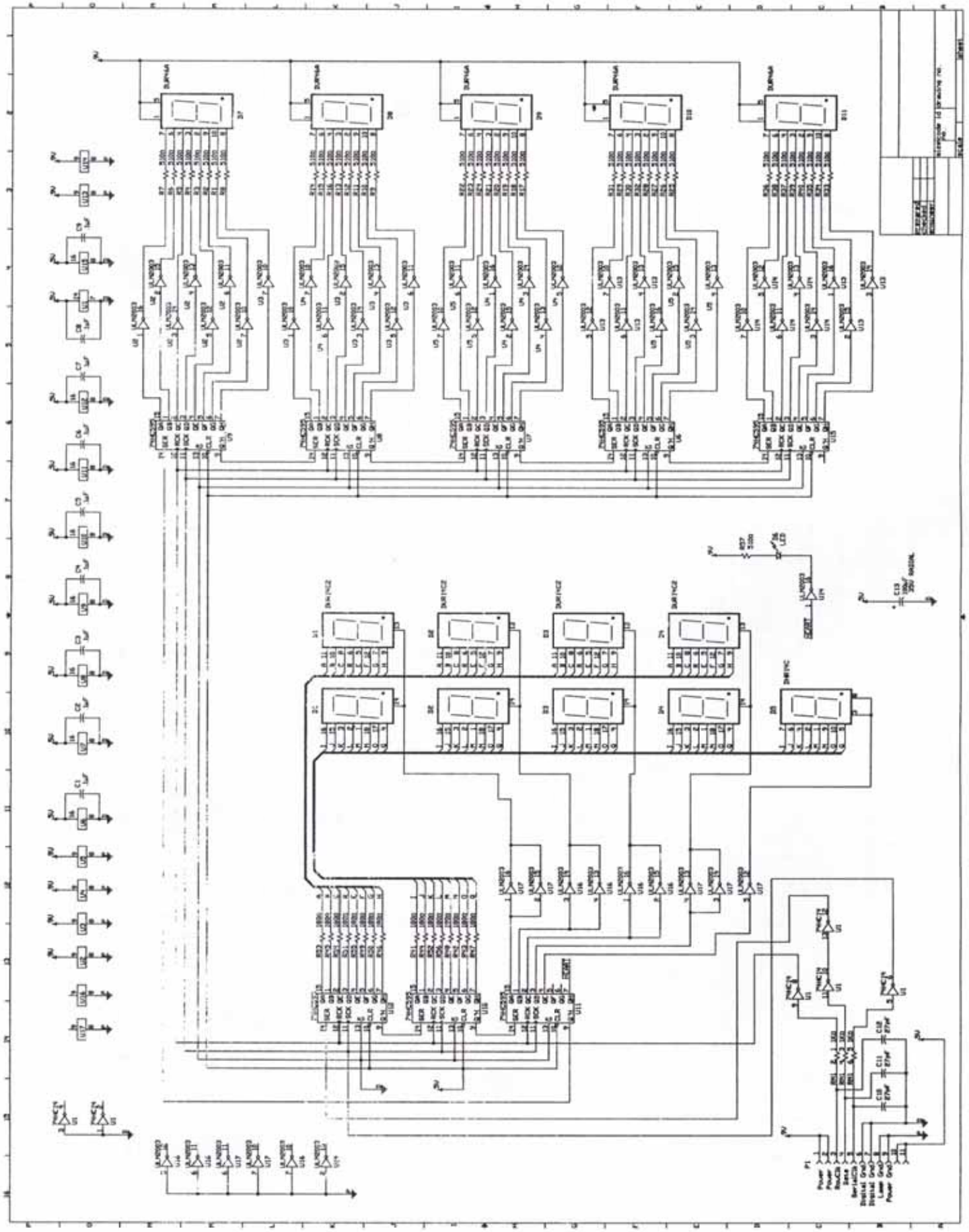

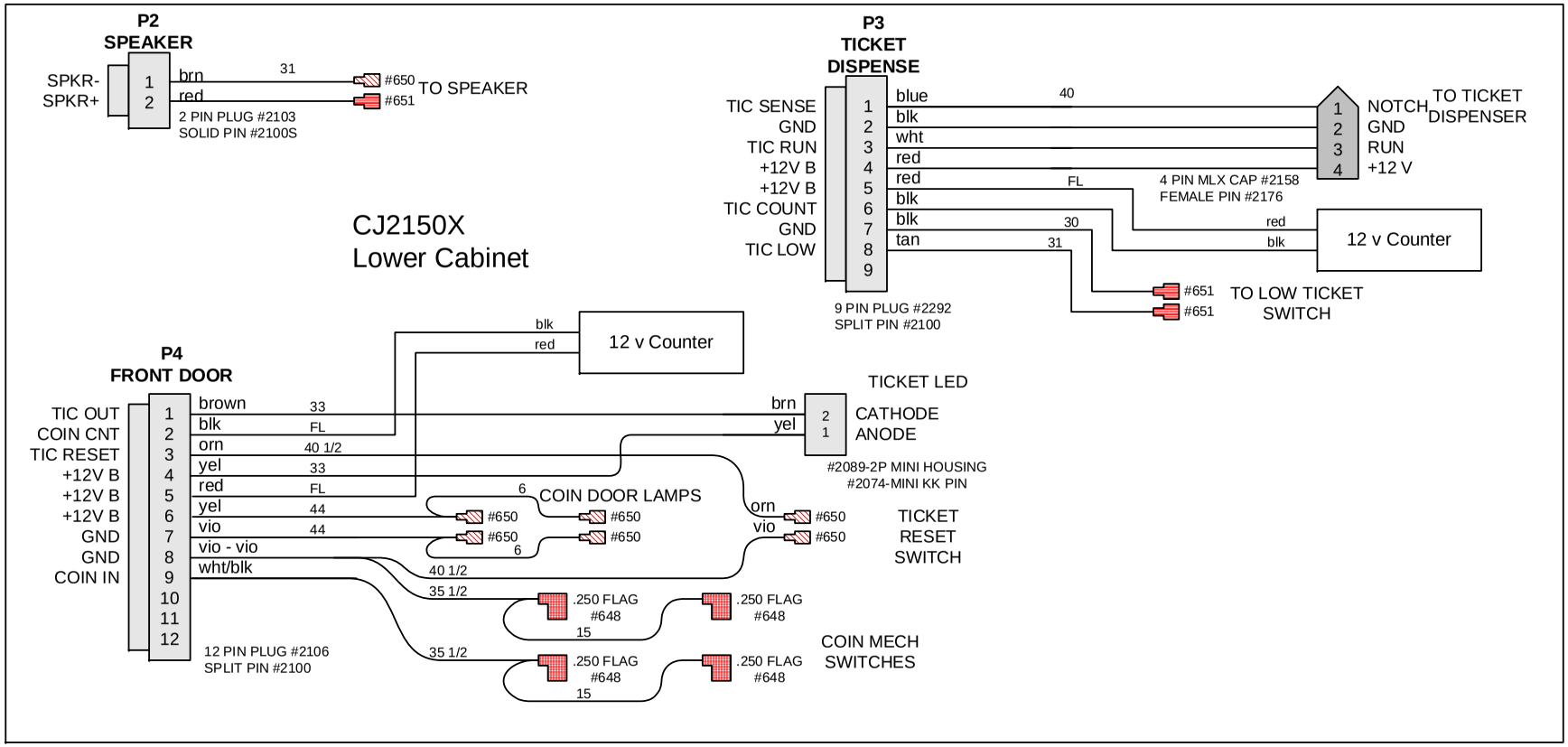

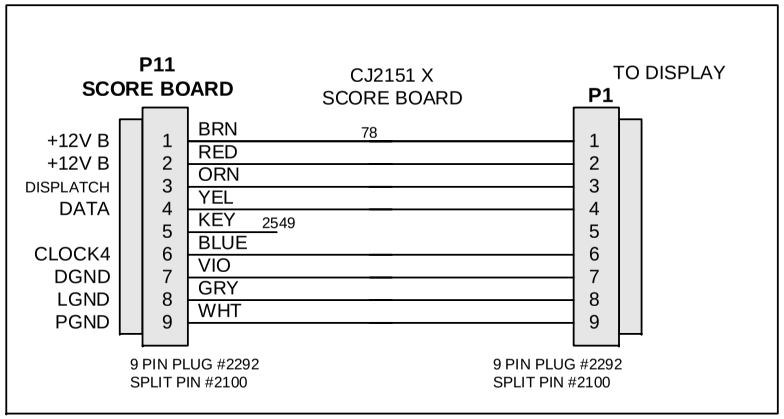

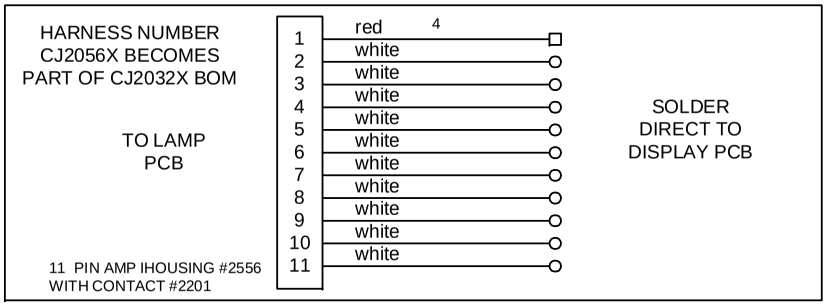

TITLE	CYCLONE JR. JR. WIRING DIAGRAMSCYCJRJR		
DESCRIPTION	CABINET HARNESSES	FILENAME	CYCJRJR.VSD
		DRAWN BY	RMO
DATE 1/8/01	REVISED 1/30/01	PAGE	1 OF 3

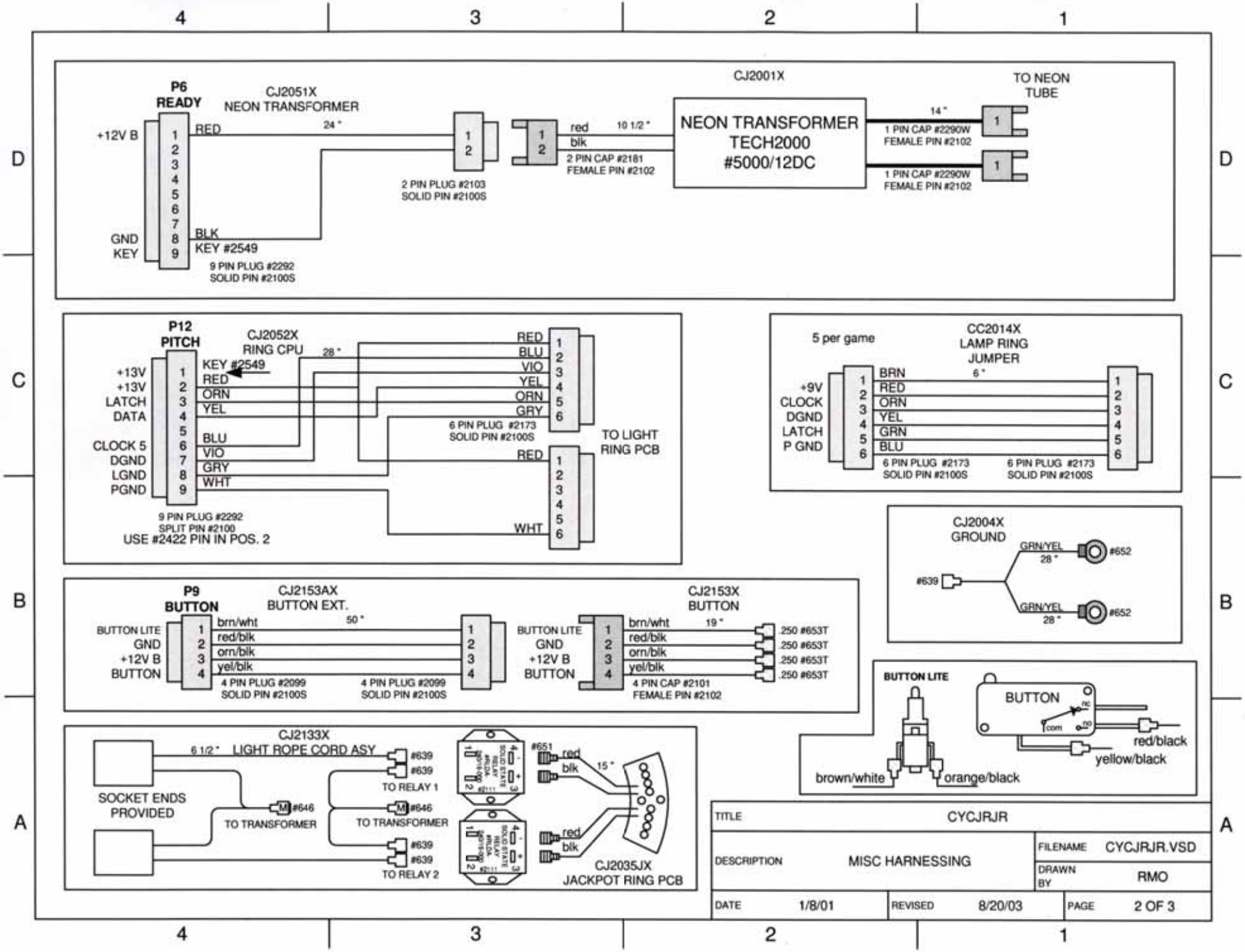
P6
READY
CJ2051X
NEON TRANSFORMER
+12V B
RED
24 "
GND
KEY
BLK
KEY #2549
9 PIN PLUG #2292
SOLID PIN #2100S
2 PIN PLUG #2103
SOLID PIN #2100S
red
blk
10 1/2 "
2 PIN CAP #2181
FEMALE PIN #2102
CJ2001X
NEON TRANSFORMER
TECH2000
#5000/12DC
14 "
1 PIN CAP #2290W
FEMALE PIN #2102
TO NEON
TUBE
P12
PITCH
CJ2052X
RING CPU
+13V
+13V
LATCH
DATA
CLOCK 5
DGND
LGND
PGND
KEY #2549
RED
ORN
YEL
BLU
VIO
GRY
WHT
28 "
9 PIN PLUG #2292
SPLIT PIN #2100
USE #2422 PIN IN POS. 2
RED
BLU
VIO
YEL
ORN
GRY
6 PIN PLUG #2173
SOLID PIN #2100S
RED
WHT
TO LIGHT
RING PCB
5 per game
CC2014X
LAMP RING
JUMPER
+9V
CLOCK
DGND
LATCH
P GND
BRN
RED
ORN
YEL
GRN
BLU
6 "
6 PIN PLUG #2173
SOLID PIN #2100S
6 PIN PLUG #2173
SOLID PIN #2100S
CJ2004X
GROUND
#639
GRN/YEL
28 "
#652
GRN/YEL
28 "
#652
P9
BUTTON
CJ2153AX
BUTTON EXT.
BUTTON LITE
GND
+12V B
BUTTON
brn/wht
red/blk
orn/blk
yel/blk
50 "
4 PIN PLUG #2099
SOLID PIN #2100S
4 PIN PLUG #2099
SOLID PIN #2100S
CJ2153X
BUTTON
BUTTON LITE
GND
+12V B
BUTTON
brn/wht
red/blk
orn/blk
yel/blk
19 "
.250 #653T
.250 #653T
.250 #653T
.250 #653T
4 PIN CAP #2101
FEMALE PIN #2102
BUTTON LITE
BUTTON
com
nc
no
red/black
yellow/black
brown/white
orange/black
CJ2133X
LIGHT ROPE CORD ASY
6 1/2 "
SOCKET ENDS
PROVIDED
#646
TO TRANSFORMER
#639
#639
TO RELAY 1
#646
TO TRANSFORMER
#639
#639
TO RELAY 2
#651
red
blk
15 "
red
blk
CJ2035JX
JACKPOT RING PCB
TITLE
CYCJRJR
DESCRIPTION
MISC HARNESSING
FILENAME
CYCJRJR.VSD
DRAWN BY
RMO
DATE
1/8/01
REVISED
8/20/03
PAGE
2 OF 3

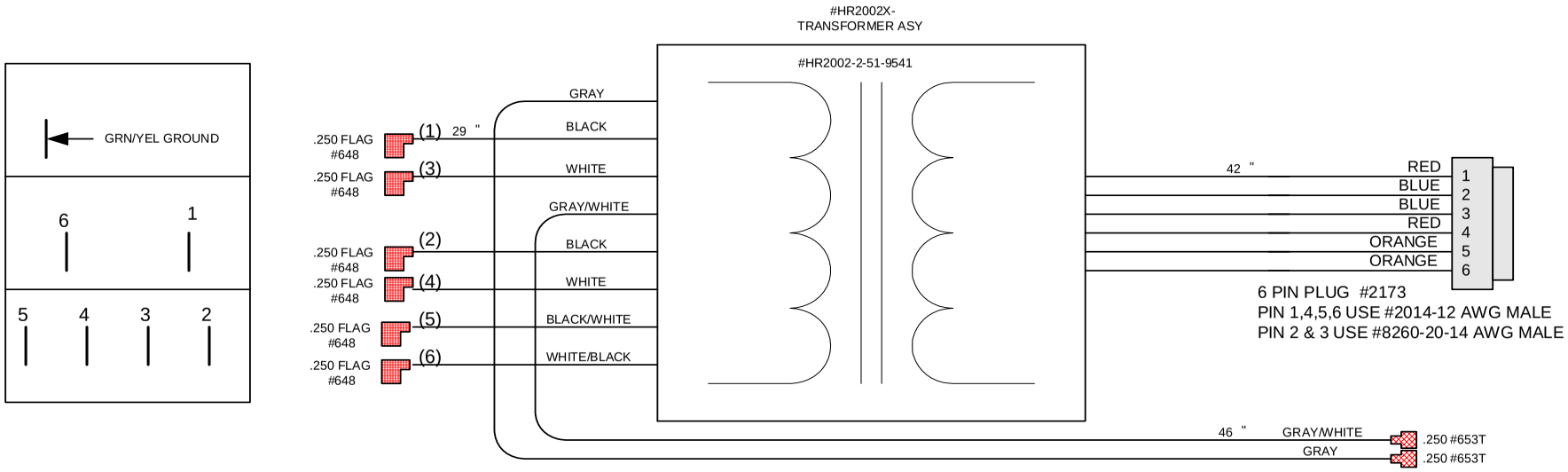

USED IN HITTING STREAK
CYCLONE JR
CYCLONE JR JR

TITLE	HITTING STREET MOUSE ATTACK		
DESCRIPTION	#HR2002X-TRANSFORMER ASY	FILENAME	MA_VSD..VSD
		DRAWN BY	CHERYLZ1
DATE 3/3/00	REVISED 1/10/01	PAGE	1 OF 1

Warranty

I.C.E warrants all components in the **CYCLONE JUNIOR™** game to be free of defects in materials and workmanship for a period of ninety days from the date of purchase.

This warranty does not cover items damaged due to normal wear and tear, subjected to abuse, improperly assembled by the end user, modified, repaired, or operated in a fashion other than that described in the service manual.

If your **CYCLONE JUNIOR™** game fails to conform to the above-mentioned warranty, I.C.E.'s sole responsibility shall be at its option to repair or replace any defective component with a new or remanufactured component of equal to or greater O.E.M. specification.

I.C.E. will assume no liability whatsoever, for costs associated with labor to replace defective parts, or travel time associated therein.

I.C.E.'s obligation will be to ship free of charge, replacement parts by U.P.S. Ground, U.S. mail, or other comparable shipping means. Any express mail or overnight shipping expense is at the cost of the purchaser.

Products will be covered under warranty only when:

- The serial number of the game with the defective parts is given.
- The serial number of the defective part, if applicable, is given.
- Defective parts are returned to I.C.E., shipping pre-paid, in a timely fashion, if requested by I.C.E.
- A copy of the sales receipt is available as proof of purchase upon request of I.C.E.

I.C.E. distributors are independent, privately owned and operated. In their judgment, they may sell parts or accessories other than those manufactured by I.C.E. We cannot be responsible for the quality, suitability, or safety of any non-I.C.E. part, or any modification, including labor, which is performed by such a distributor.

WARRANTY

ICE Inc warrants that all of its products will be free from defects in material and workmanship.

When placing a warranty request, please be prepared to provide the following information:

- Serial Number of Game or Bill of Sale
- Machine Type
- A Detailed Description of the Equipment Fault Symptoms

ICE product, including Cromptons, Sam's Billiards, Uniana and Bell Fruit is warranted as follows:

- 180 days on the Main PCB and Computers
- 90 days on all other components (i.e. DBV's, Ticket Dispensers, etc)
- 30 days on repaired items
- 3 years on all Crane Harnessing
- 9 Months on Printers

ICE Inc shall not be obligated to furnish a warranty request under the following conditions:

- Equipment has been subjected to unwarranted stress through abuse or neglect
- Equipment has been damaged as a result of arbitrary repair/modification attempts
- Equipment that has failed through normal wear and tear

ICE Inc will assume no liability whatsoever for costs associated with labor to replace defective parts or travel time associated therein.

All defective warranty covered components will be replaced with new or factory refurbished components equal to OEM specifications. ICE Inc will cover all UPS ground, or comparable shipping means, freight costs during the warranty period. Expedited shipments are available for an additional charge.

Defective parts are returned to ICE Inc, at the customer's expense, in a timely fashion.

ICE distributors are independent, privately owned and operated. In their judgment, they may sell parts and/or accessories other than those manufactured by ICE Inc. We cannot be responsible for the quality, suitability or safety of any non-ICE part, modification (including labor) that is performed by such a distributor.

I.C.E. Parts/Service Dept.
Innovative Concepts in Entertainment
10123 Main St.
Clarence, NY 14031
Phone #: (716) - 759 – 0360
Fax #: (716) – 759 – 0884